Panasonic

PAN9420

Fully Embedded Stand-Alone Wi-Fi Module

Design Guide

Rev. 1.0

Wireless Modules

Overview

The PAN9420 is a 2.4 GHz ISM band Wi-Fi embedded module which includes a wireless radio and an MCU for easy integration of Wi-Fi connectivity into various electronic devices.

Features

- Fully embedded: integrated full-featured network stack
- Contains all necessary IoT functionality (Place and Play)
- Integrated web server with AJAX/JSON for web applications
- No stack or software implementation needed on a host MCU
- Simultaneous support of access point- and Infrastructure mode
- Fully automatical IP configuration
- DHCP server offers IP configuration in AP mode
- Access by names (http://yourdevice)
- Integrated TCP/IP network stack: IPv4, ARP, and Auto IP
- Supports TLS/SSL, HTTPS and Wi-Fi security (WPA2-PSK) for secure data connection Over-the-Air firmware update
- Two UART interfaces (command and transparent data)
- Integrated QSPI flash memory for customer web contents and configuration file
- Programming via standard JTAG
- Evaluation kit with pre-installed web application for quick prototyping available
- Evaluation and development tool WiFigurator for Windows
- Getting started tutorials, PC tool, Quick Start Guide
- Wide temperature range of -40 °C to +85 °C

Characteristics

- Surface Mount Type (SMT) 29.0 mm x 13.5 mm x 2.66 mm
- Marvell® 88MW300 MCU/WLAN System-on-Chip (SoC) inside
- Tx power up to +16 dBm @ IEEE 802.11b
- Rx sensitivity of -97 dBm @ IEEE 802.11b DSSS 1 Mbps
- 20 MHz channels up to 72 Mbps
- Power supply 3.0 V-3.6 V
- Current consumption 150 mA (mix mode Tx/Rx @ 11b, 11 Mbps), 75 mA Rx, 310 mA Tx peak
- Power down mode < 1 mA power consumption
- Low power mode available

Block Diagram

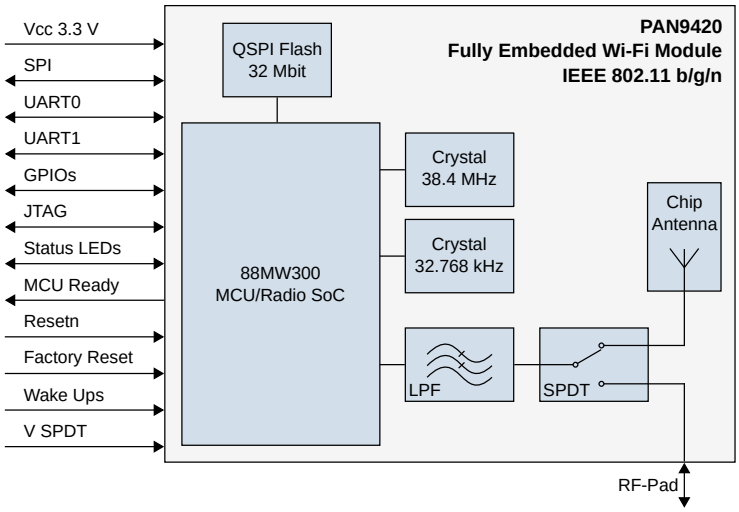

By purchase of any of the products described in this document the customer accepts the document's validity and declares their agreement and understanding of its contents and recommendations. Panasonic Industrial Devices Europe GmbH (Panasonic) reserves the right to make changes as required at any time without notification. Please consult the most recently issued Design Guide before initiating or completing a design.

© Panasonic Industrial Devices Europe GmbH 2018.

This specification sheet is copyrighted. Reproduction of this document is permissible only if reproduction is without alteration and is accompanied by all associated warranties, conditions, limitations, and notices. Do not disclose it to a third party.

All rights reserved.

This Design Guide does not lodge the claim to be complete and free of mistakes.

Engineering Samples (ES)

If Engineering Samples are delivered to the customer, these samples have the status “Engineering Samples”. This means that the design of this product is not yet concluded. Engineering Samples may be partially or fully functional, and they may differ from the published Product Specification.

Engineering Samples are not qualified and they are not to be used for reliability testing or series production.

Disclaimer

The customer acknowledges that samples may deviate from the Design Guide and may bear defects due to their status of development and the lack of qualification mentioned above.

Panasonic rejects any liability or product warranty for Engineering Samples. In particular, Panasonic disclaims liability for damages caused by:

- The use of the Engineering Sample other than for evaluation purposes, particularly the installation or integration in another product to be sold by the customer,
- Deviation or lapse in function of the Engineering Sample,
- Improper use of the Engineering Sample.

Panasonic Industrial Devices Europe GmbH disclaims any liability for consequential and incidental damages. In case of any queries regarding the Engineering Samples, please contact your local sales partner or the related product manager.

Table of Contents

1 About This Document 5
1.1 Purpose and Audience 5
1.2 Revision History 5
1.3 Use of Symbols 5
1.4 Related Documents 5

2 Overview 6

3 PAN9420 Module 7
3.1 Block Diagram 7
3.2 Footprint 8
3.3 Land Pattern 8
3.4 Pattern Recommendation 9
3.5 Solder and Resist Mask 9
3.6 Placement 10
3.7 Power Supply 11
3.8 RF Path 11

4 PAN9420ETU (Easy-To-Use) 14
4.1 PAN9420ETU Live View 14
4.2 Functional Blocks 15
4.3 Pinning 16
4.4 Part Placement 18
4.5 Schematic 19
4.6 PCB Layout 20

5 PAN9420 Arduino Shield 22
5.1 PAN9420 Arduino Shield Live View 22
5.2 Functional Blocks 23
5.3 Pinning 24
5.4 Part Placement 24
5.5 Schematic 25
5.6 PCB Layout 26

6 Cautions 27
6.1 Life Support Policy 27

7 Appendix 28
7.1 Ordering Information 28
7.2 Contact Details 29

1 About This Document

1.1 Purpose and Audience

This Design Guide provides details on the electrical integration of the Panasonic PAN9420 module. It is intended for hardware design, application, and Original Equipment Manufacturers (OEM) engineers. The product is referred to as “the PAN9520” or “the module” within this document.

1.2 Revision History

Revision	Date	Modifications/Remarks
1.0	2018-07-17	First Design Guide version

1.3 Use of Symbols

Symbol	Description
	Note Indicates important information for the proper use of the product. Non-observance can lead to errors.
	Attention Indicates important notes that, if not observed, can put the product’s functionality at risk.
	Tip Indicates useful information designed to facilitate working with the PAN9420.
⇨ [chapter number] [chapter title]	**Cross reference** Indicates cross references within the document. **Example:** Description of the symbols used in this document ⇨ 1.3 Use of Symbols.
✓	**Requirement** Indicates a requirement that must be met before the corresponding tasks can be completed.

1.4 Related Documents

Please refer to the Panasonic website for related documents ⇨ 7.2.2 Product Information.

2 Overview

This Design Guide applies to the PAN9420 Wi-Fi embedded module and the PAN9420ETU (Easy-To-Use) development platform. The intention is to enable our customers to easily and fast integrate our module PAN9420 in their product. This Design Guide describes the hardware integration and gives useful hints.

This document is structured into two main parts:

- The hardware integration of the PAN9420 module.
- The PAN9420ETU development platform as an example for the module integration.

Please refer to the Panasonic website for related documents ⇨ 7.2.2 Product Information.

Further information on the variants and versions ⇨ 7.1 Ordering Information.

3 PAN9420 Module

3.1 Block Diagram

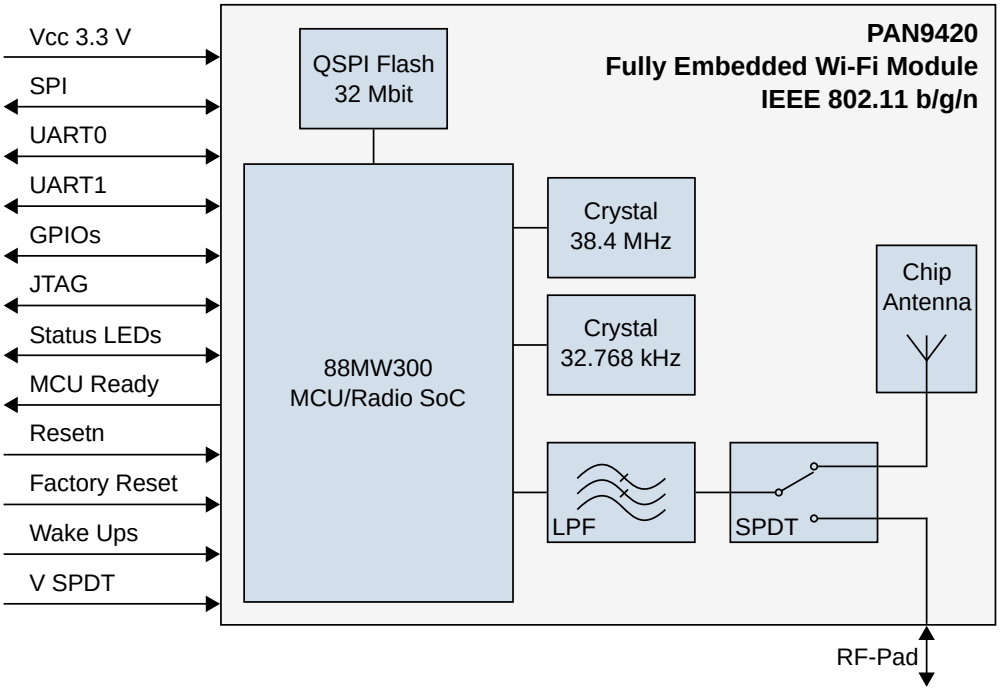

3.2 Footprint

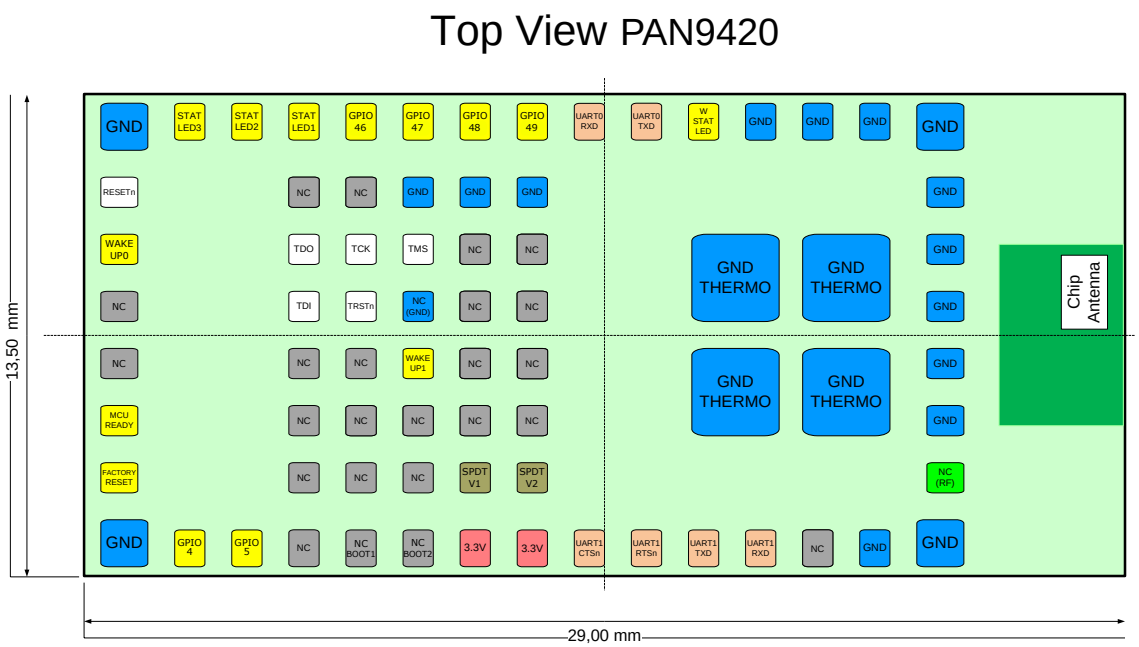

3.3 Land Pattern

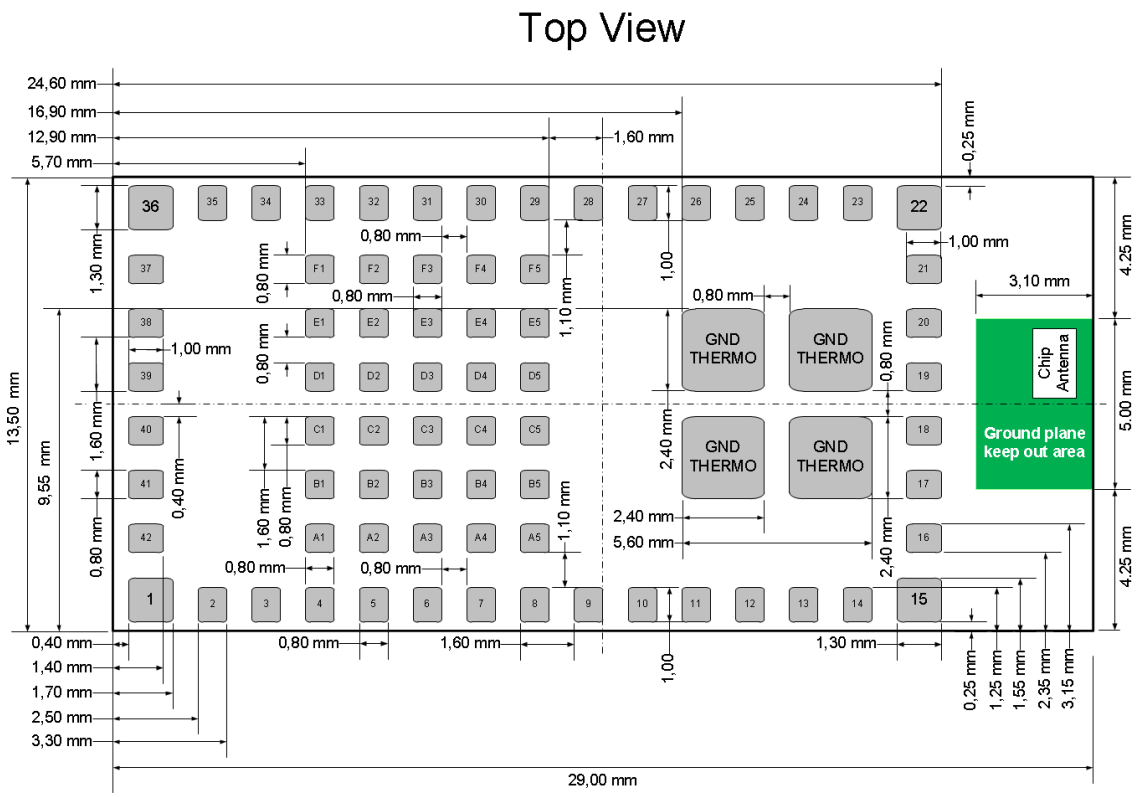

3.4 Pattern Recommendation

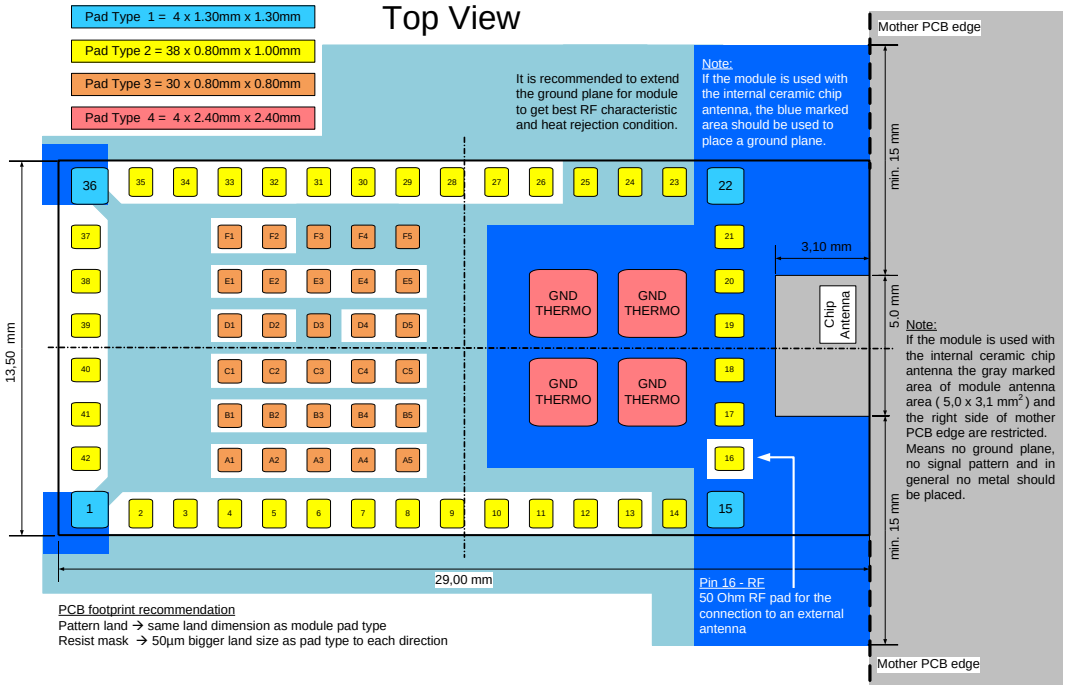

3.5 Solder and Resist Mask

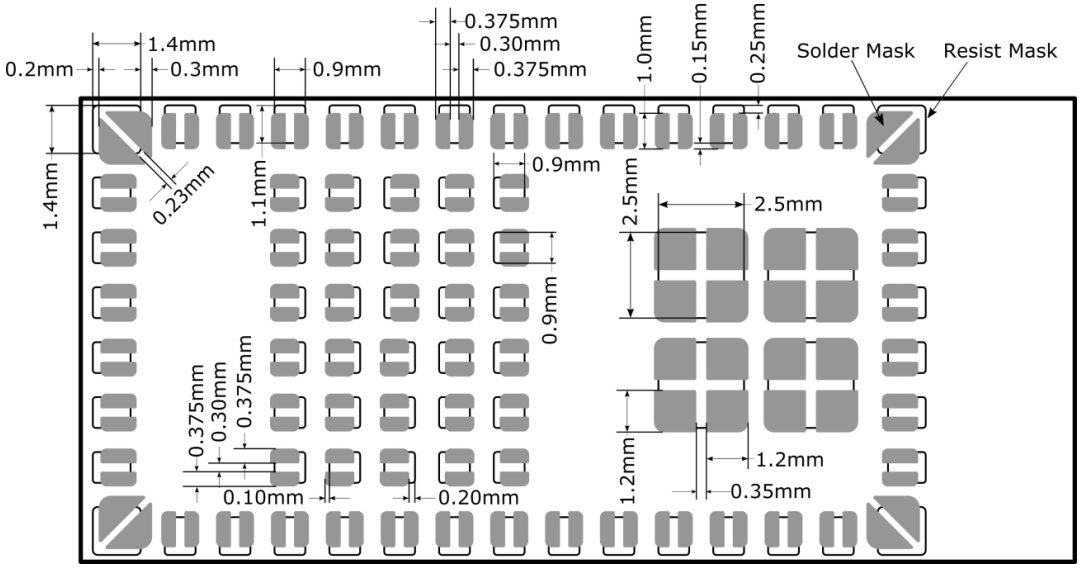

The following requirements must be met:

- ✓ The Resist Mask should be circumferential 50 µm bigger than the pad size (⇨ 3.3 Land Pattern).
- ✓ The Solder Mask apertures should have the diameter as the pads (⇨ 3.3 Land Pattern); they are separated in two parts with the shown distance and a shifting.

3.6 Placement

Antenna Keep-out Area

Do not place any ground plane under the marked restricted antenna area in any layer! This would be affecting the performance of the chip antenna in a critical manner.

The following requirements must be met:

- ✓ Keep this product away from heat. Heat is the major cause of decreasing the life of these products.
- ✓ Keep this product away from other high frequency circuits.

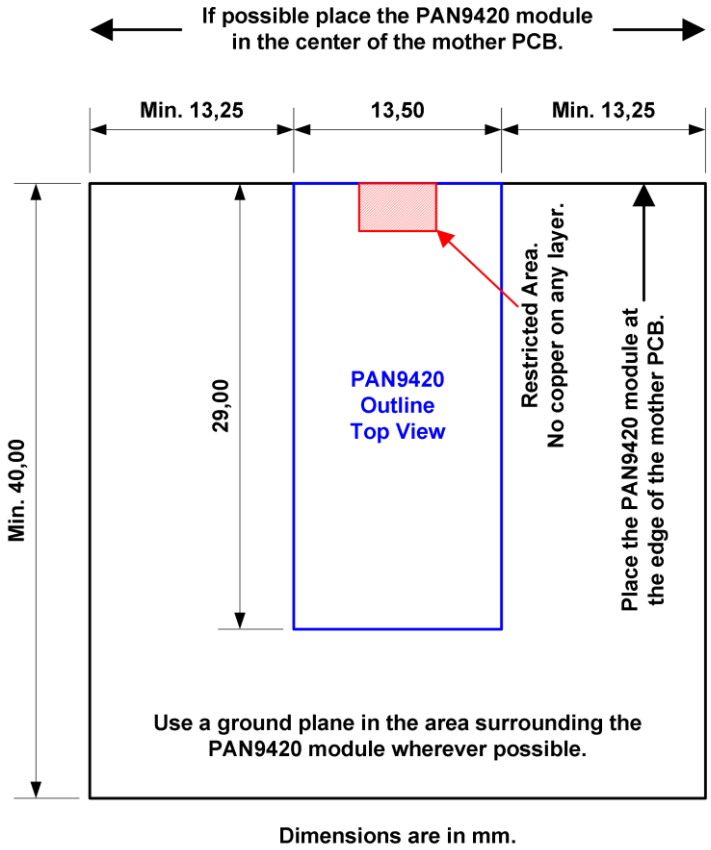

The above recommendation for the ground plane is based on a FR4 4-Layer PCB.

Impact of Placement on the Antenna Radiation Pattern

The placement of the module, the surrounding material, and the customer components might have an impact on the radiation pattern of the on-board antenna.

It is recommended to verify the perfect position of the module in the target application before fixing the design. In some applications it could be reasonable to use an external antenna to handle application caused placement restrictions.

For the use of an external antenna refer to section ⇨ 3.8.1 External Antenna.

3.7 Power Supply

The following requirements must be met:

- ✓ The supply voltage must be free of AC ripple voltage (for example from a battery or a low noise regulator output). For noisy supply voltages, provide a decoupling circuit (for example a ferrite in series connection and a bypass capacitor to ground of at least 47 µF directly at the module).
- ✓ The supply voltage should not be exceedingly high or reversed. It should not carry noise and/or spikes.
- ✓ Make sure that the power-up sequence meets the requirements mentioned in the PAN9420 Product Specification.
- ✓ The supply current of VDD (3.3V) must be limited to maximal 1 A.

3.8 RF Path

3.8.1 External Antenna

Antenna Warning

The PAN9420 is tested with a standard U.FL connector and with the antenna listed in the regulatory and certification chapter of the PAN9420 Product Specification. When integrated into the OEM's product, these fixed antennas require installation preventing end users from replacing them with non-approved antennas. Any antenna not in the regulatory and certification chapter of the PAN9420 Product Specification must be tested to comply with FCC Section 15.203 for unique antenna connectors and with Section 15.247 for emissions.

The PAN9420 module has a 50 Ω RF pin (SMD pad). Connect an external antenna directly or via a connector (e.g. U.FL) with RF trace to this RF pin. This RF trace shall be matched to 50 Ω ⇨ 3.8.2 RF Trace.

3.8.2 RF Trace

Ensure that the RF trace impedance is nearly 50 Ω. It is recommended to use a Coplanar Waveguide with Ground (CPWG) design. The impedance is related to the trace width, the distances of the trace to the ground layers and the material of the PCB.

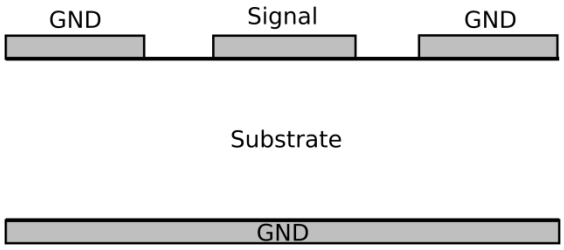

The following requirements shall be met:

- ✓ Trace impedance of 50 Ω
- ✓ Trace length shall not exceed 2 cm
- ✓ Via fence around the trace
- ✓ Crossing no other lines (power supply, interfaces or clock traces)

Example 1: 50 Ω Coplanar Waveguide with Ground on SDIO Adapter

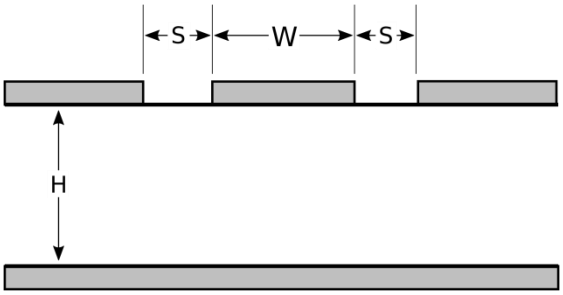

Trace width	W = 180 µm
Trace distance to ground	S = 150 µm
Substrate thickness	H = 80 µm
Effective Permittivity	ε_r = 3.9
Loss Tangent	$\tan\delta$ = 0.015

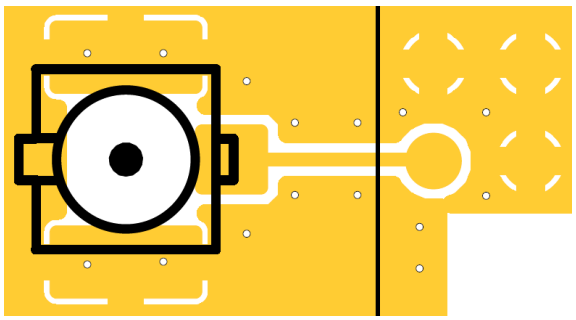

Example 2: 50 Ω Coplanar Waveguide with Ground and Micro Vias

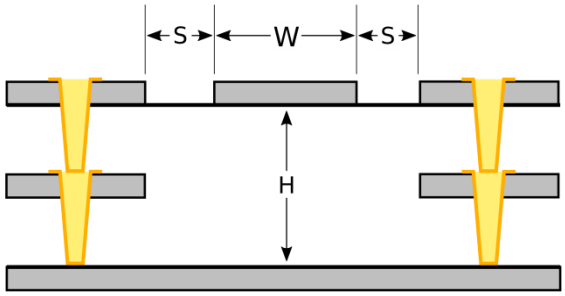

Trace width	W = 300 µm
Trace distance to ground	S = 300 µm
Substrate thickness	H = 160 µm
Effective Permittivity	ε_r = 4.2
Loss Tangent	$\tan\delta$ = 0.006

4 PAN9420ETU (Easy-To-Use)

The PAN9420ETU (Order-No. ENW49C01AZKF) is a sample application of the PAN9420 module. It is designed for mounting on the PAN9420 mother board (Order-No. ENW49C01AYKF)

4.1 PAN9420ETU Live View

4.1.1 PAN9420 Mother Board Live View

For further information of the PAN9420 mother board please refer to the PAN9420 Quick Start Guide ⇨ 7.2 Contact Details.

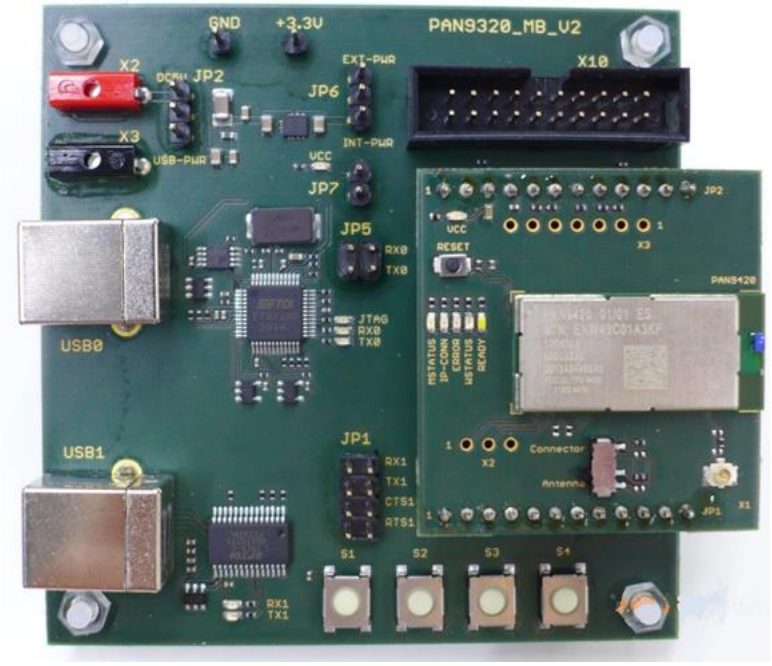

4.2 Functional Blocks

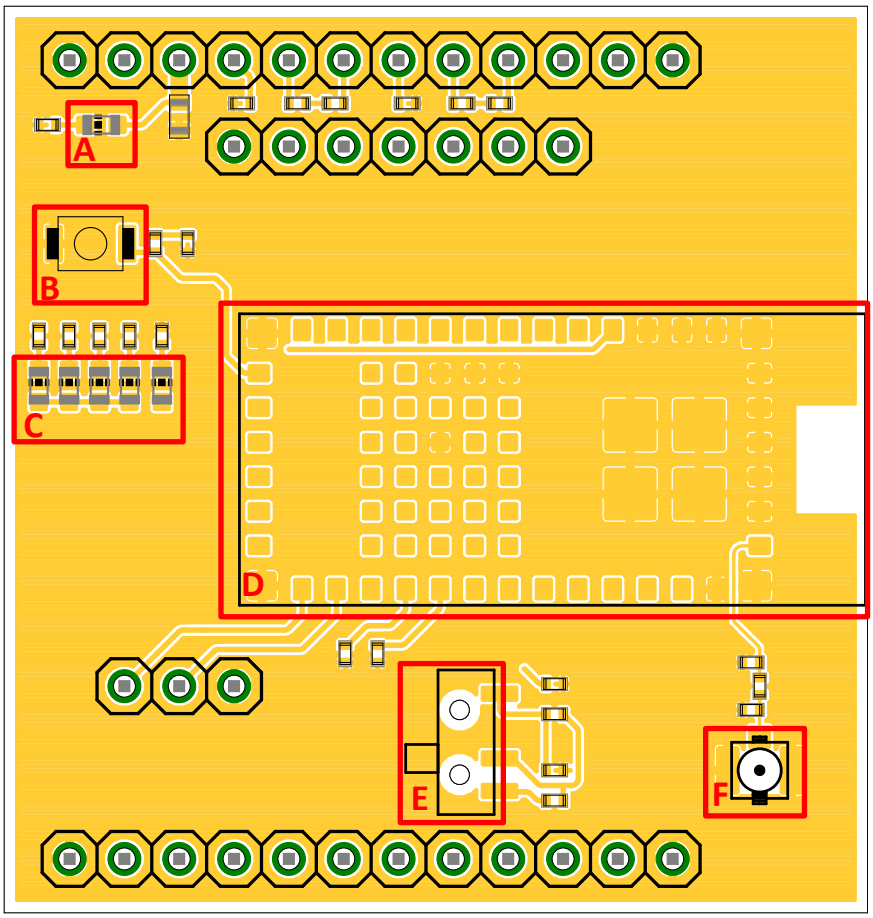

Functional Block	Description
A	Vcc LED (is active when Vcc is supplied)
B	Reset button
C	Status LED's
D	PAN9420 module
E	On-board antenna or U.FL connector selection
F	U.FL connector

4.3 Pinning

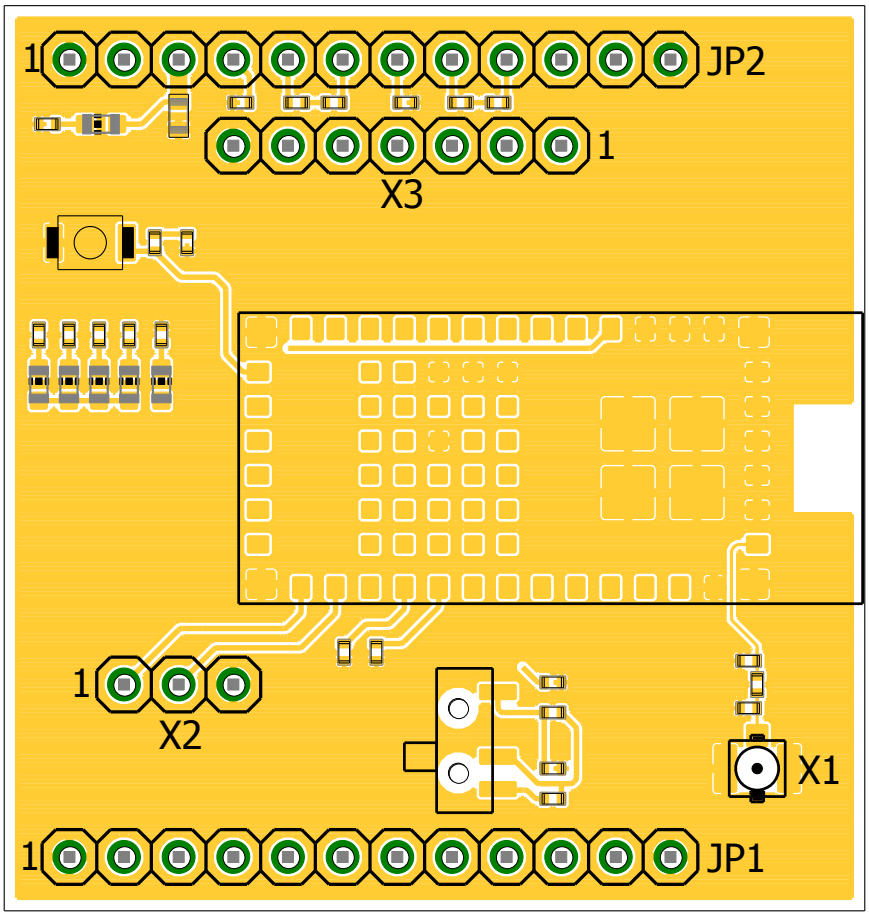

Pin Functions

Pin Header	Pin No.	Related Module Pin	Pin Name	Description
JP1	1		Ground	Connect to ground
	2	-	-	-
	3	42	FACTORY RESET	Factory reset (valid after 10 seconds), active high
	4	-	-	-
	5	38	WAKE UP0	Wake up signal for MCU/WLAN SoC, active high
	6	C3	WAKE UP1	Wake up signal for MCU/WLAN SoC, active high
	7	-	-	-
	8	9	UART1 CTS	CTSn for UART1 (using hardware flow control)
	9	10	UART1 RTS	RTSn for UART1 (using hardware flow control)
	10	11	UART1 TXD	TXD for UART1
	11	12	UART1 RXD	RXD for UART1
	12		Ground	Connect to ground

Pin Header	Pin No.	Related Module Pin	Pin Name	Description
JP2	1		Ground	Connect to ground
	2	37	RESETn	Reset MCU, active low
	3	7, 8	3.3 V	3.0 V-3.6 V power supply (typical 3.3 V)
	4	7, 8	3.3 V	3.0 V-3.6 V power supply (typical 3.3 V)
	5	D1	TDI	TDI for JTAG
	6	E1	TDO	TDO for JTAG
	7	E2	TCK	TCK for JTAG
	8	E3	TMS	TMS for JTAG
	9	D2	TRSTn	TRSTn for JTAG
	10	28	UART0 RXD/DUAL SW	RXD for UART0/UART1 toggle switch for the control of the state
	11	27	UART0 TXD/DUAL STAT	TXD for UART0/UART1 state (binary data or command)
	12		Ground	Connect to ground
X1		16	NC/RF	RF in/out over 50Ω bottom pad
X2	1	2	GPIO4	Digital I/O #4
	2	3	GPIO5	Digital I/O #5
	3		Ground	Connect to ground
X3	1	29	GPIO49	Digital I/O #49
	2	30	GPIO48	Digital I/O #48
	3	31	GPIO47	Digital I/O #47
	4	32	GPIO46	Digital I/O #46
	5	-	-	-
	6	41	MCU READY	MCU ready (booting ready), active high
	7		Ground	Connect to ground

4.4 Part Placement

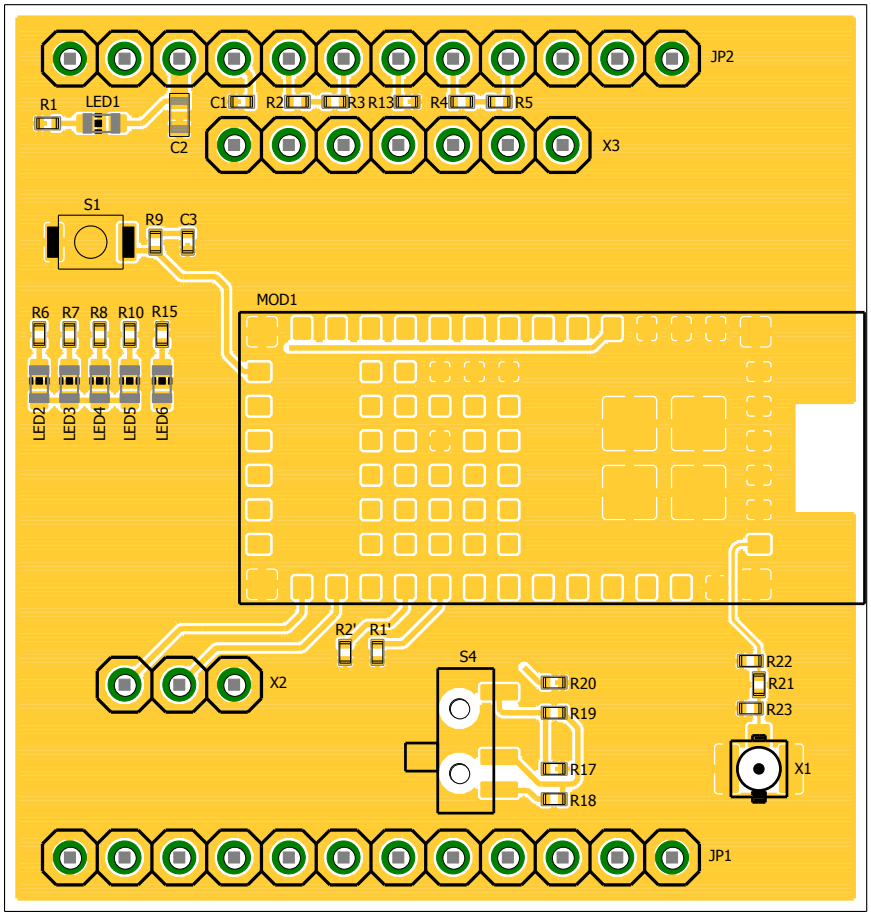

4.5 Schematic

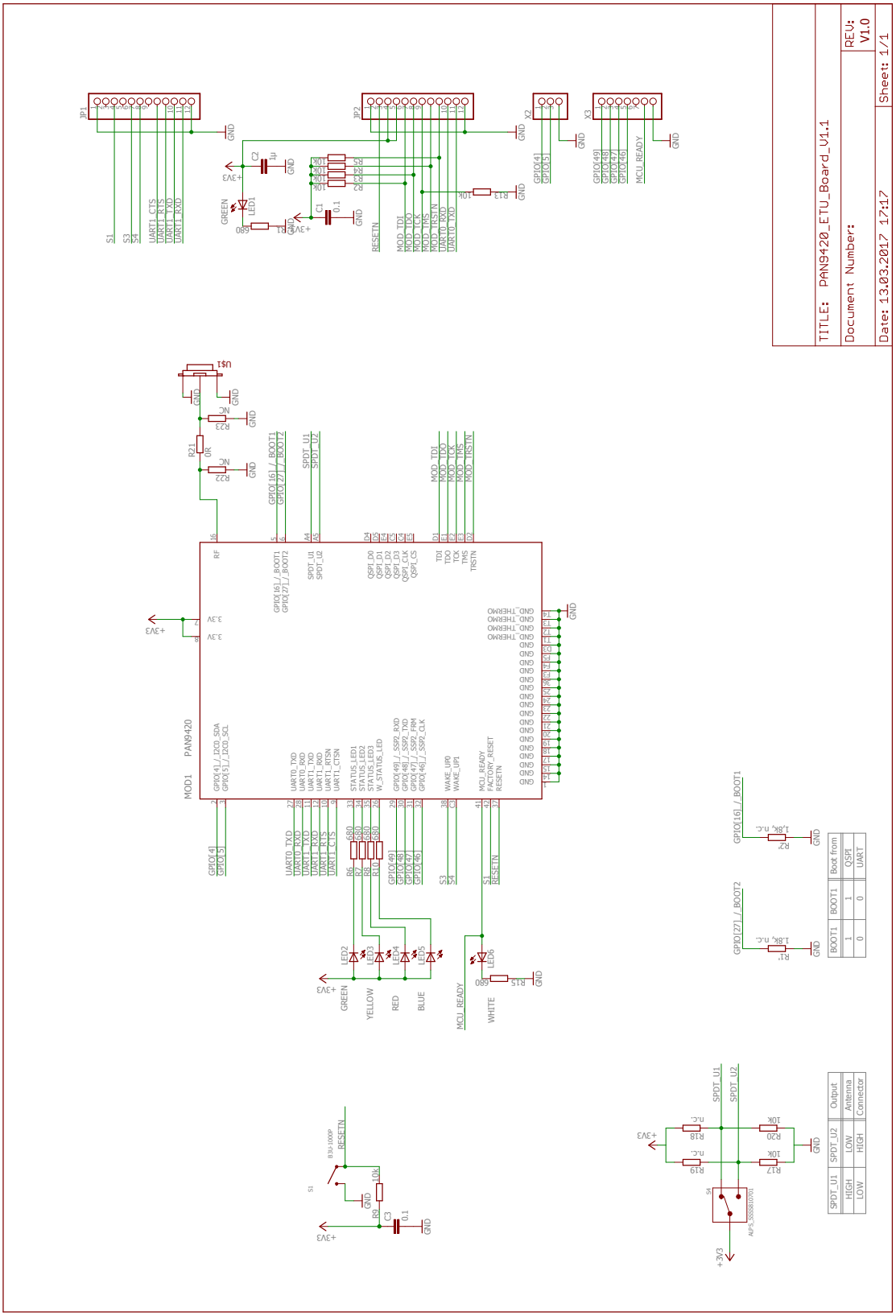

4.6 PCB Layout

4.6.1 Top Layer

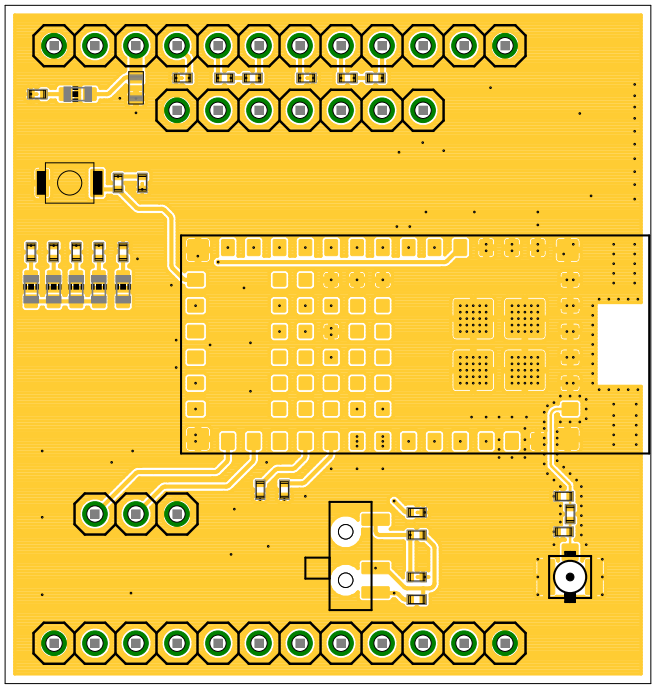

4.6.2 Layer 2

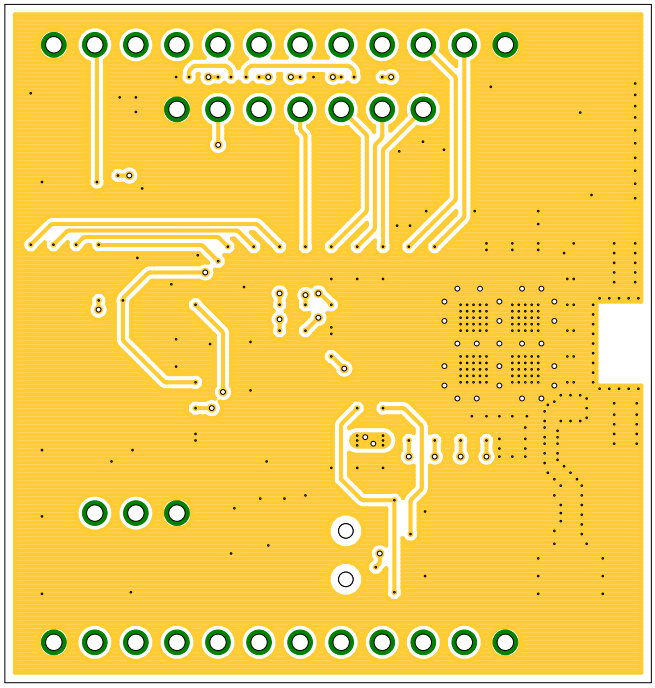

4.6.3 Layer 3

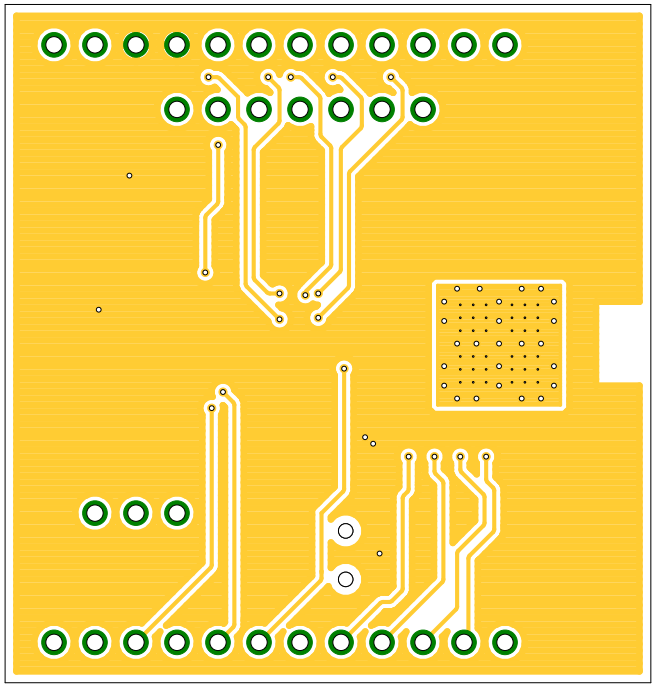

4.6.4 Bottom Layer

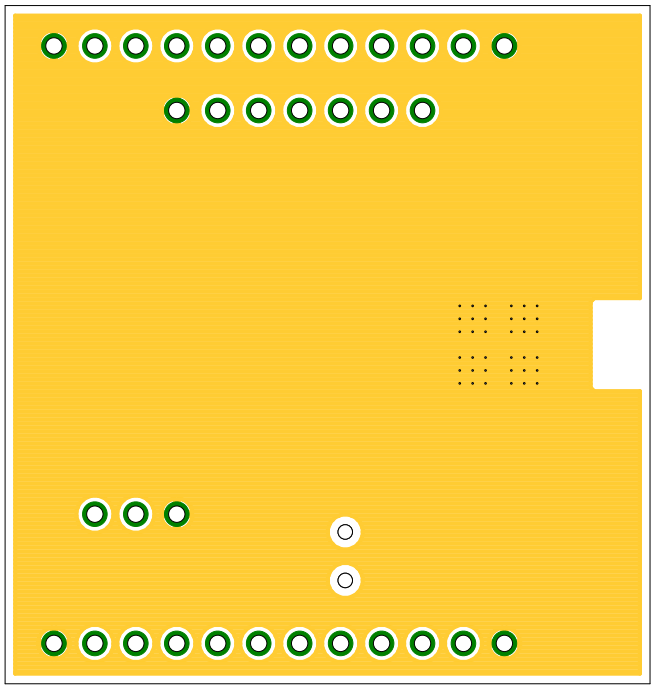

5 PAN9420 Arduino Shield

The PAN9420 Arduino Shield (Order-No. ENW49C01AXKF) is a further sample application of the PAN9420 module. It is designed for mounting on the Arduino Due.

5.1 PAN9420 Arduino Shield Live View

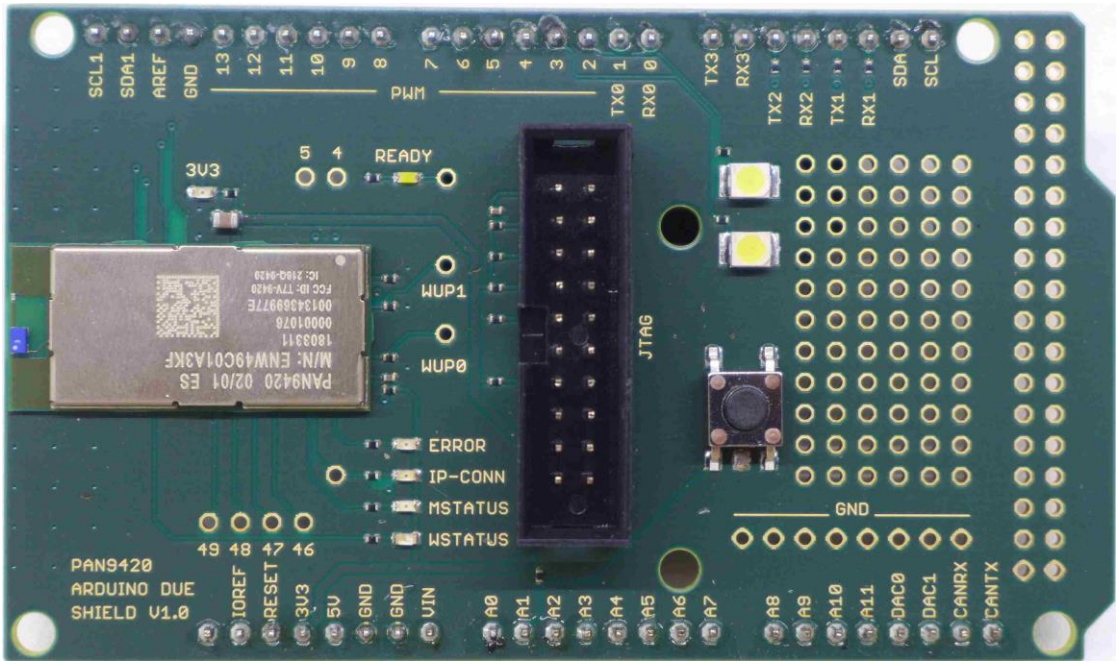

5.2 Functional Blocks

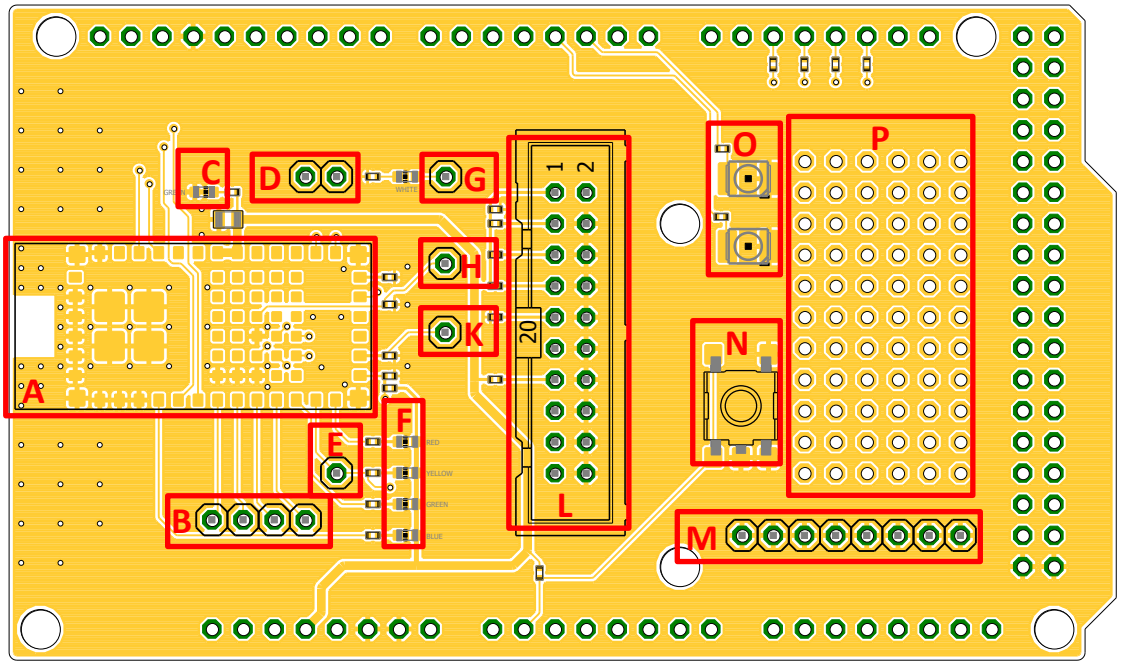

Functional Block	Description
A	PAN9420 module
B	GPIO pins (46 – 49) of the PAN9420 module
C	Vcc LED (is active when Vcc is supplied)
D	GPIO pins (4, 5) of the PAN9420 module
E	IP connectivity pin (allocated IP)
F	Status LED's
G	MCU ready pin
H	Wake up 1 pin
K	Wake up 0 pin
L	JTAG Interface
M	Ground pins
N	General purpose button connected to Arduino pin A1
O	General purpose LED's connected to Arduino pin PWM2 and PWM3
P	Free area for additional circuits

5.3 Pinning

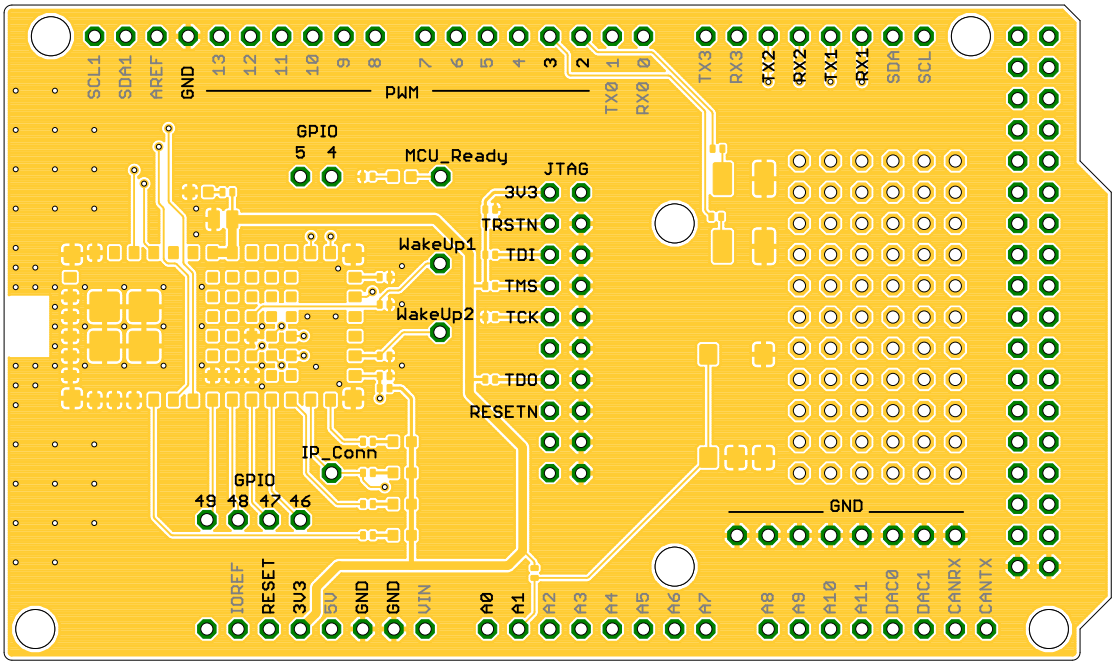

All pins with grey letter are not used for this Arduino shield.

5.4 Part Placement

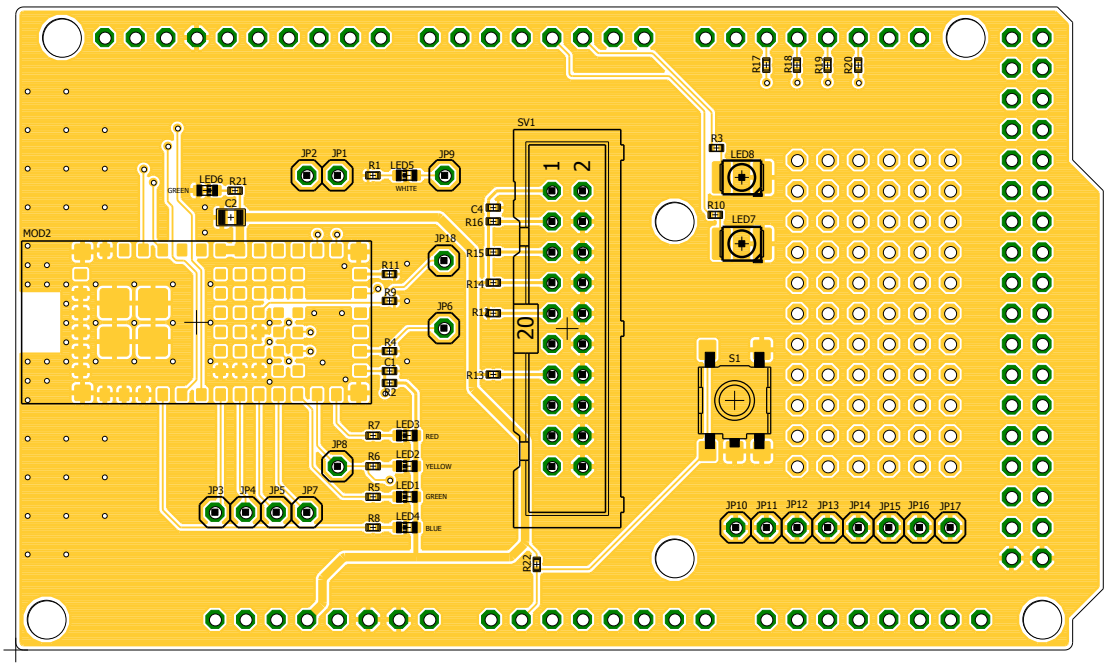

5.5 Schematic

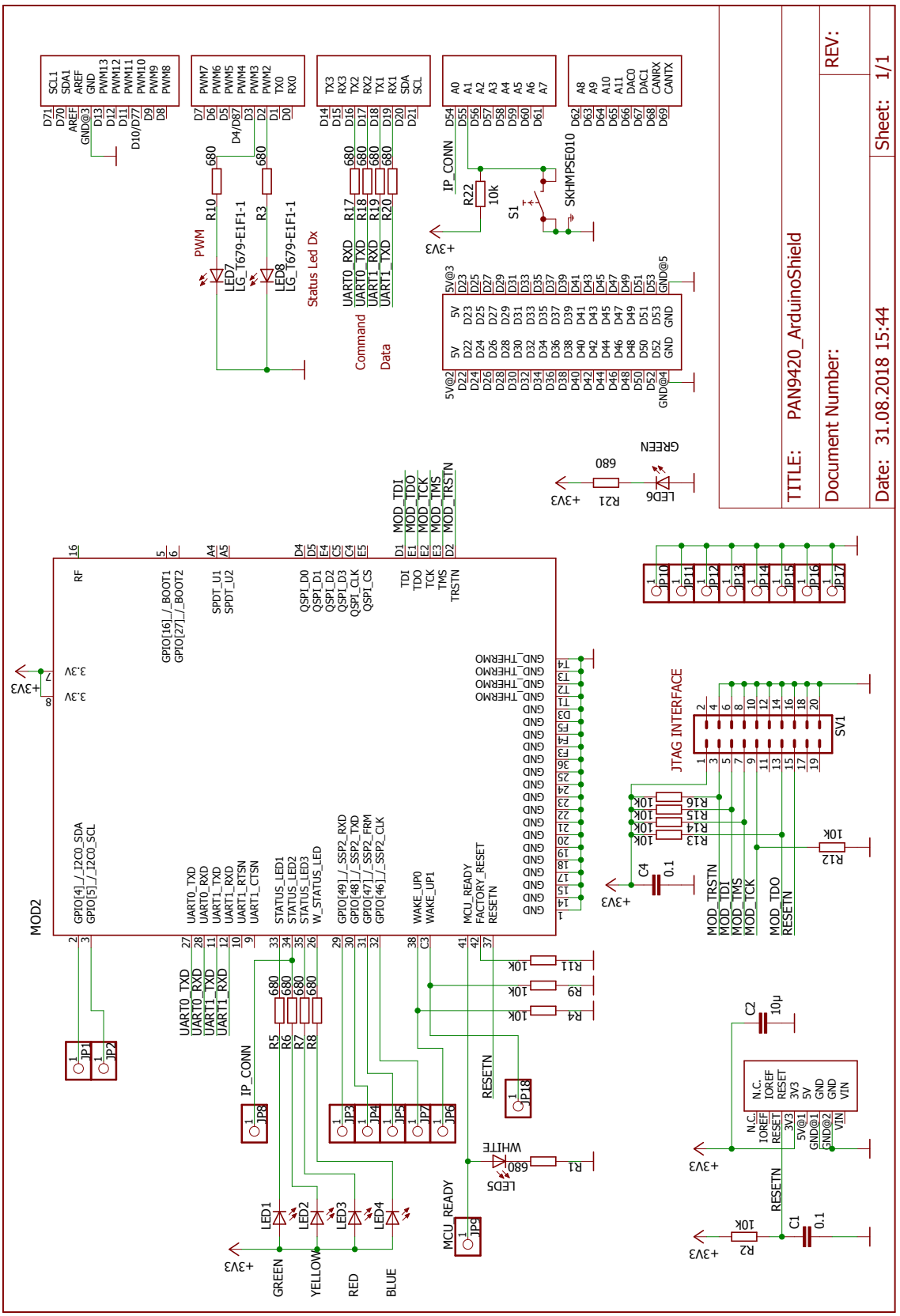

5.6 PCB Layout

5.6.1 Top Layer

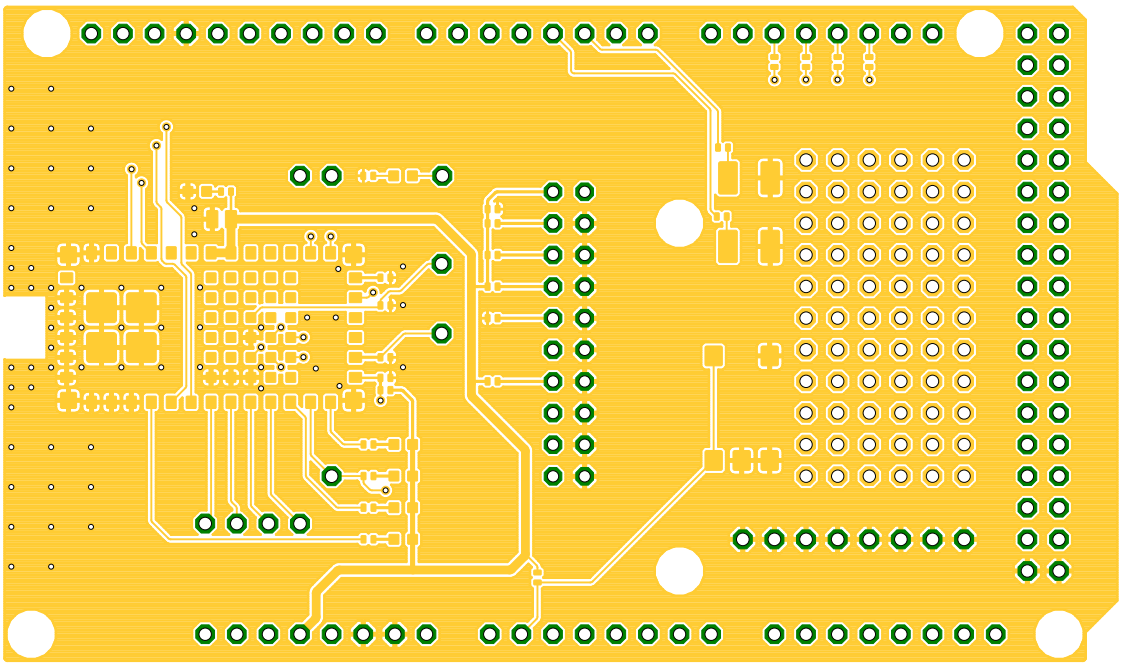

5.6.2 Bottom Layer

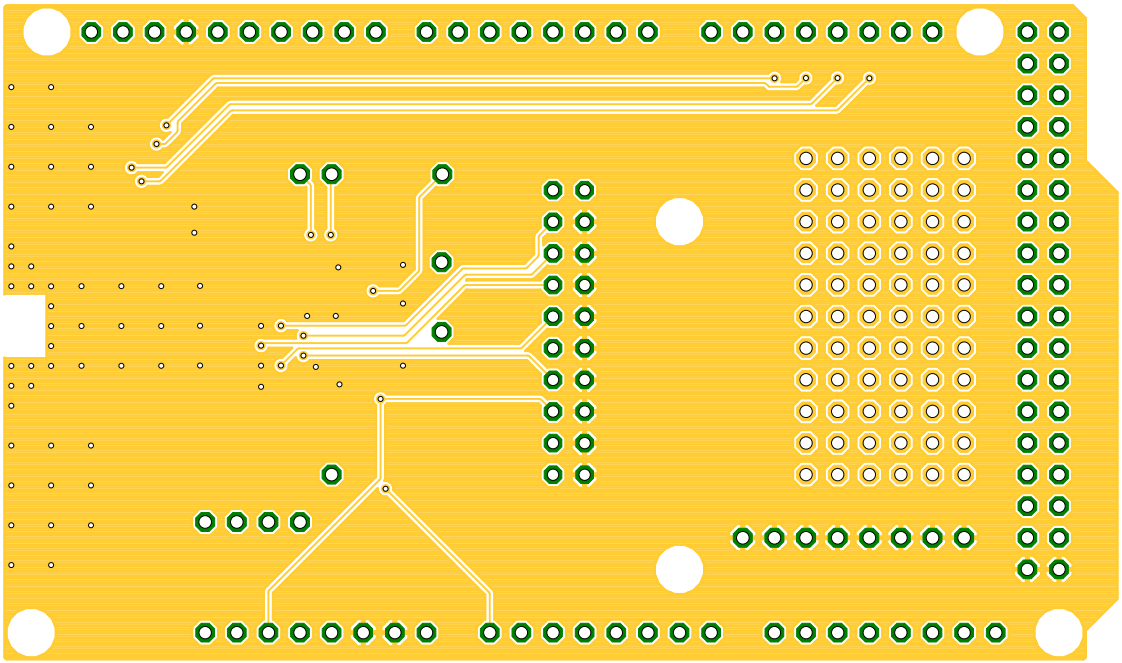

6 Cautions

6.1 Life Support Policy

This Panasonic Industrial Devices Europe GmbH product is not designed for use in life support appliances, devices, or systems where malfunction can reasonably be expected to result in a significant personal injury to the user, or as a critical component in any life support device or system whose failure to perform can be reasonably expected to cause the failure of the life support device or system, or to affect its safety or effectiveness.

Panasonic customers using or selling these products for use in such applications do so at their own risk and agree to fully indemnify Panasonic Industrial Devices Europe GmbH for any damages resulting.

7 Appendix

7.1 Ordering Information

Variants and Versions

Order Number	Brand Name	Description	MOQ[1]
ENW49C01A3KF	PAN9420	Fully embedded stand alone Wi Fi module IEEE 802.11 b/g/n Regulatory notice: FCC/IC for US and for Canada Supported channel: Channel 1~11, 2412~2462 MHz	500
ENW49C02A3KF	PAN9420	Fully embedded stand alone Wi Fi module IEEE 802.11 b/g/n Regulatory notice: ETSI for EU and other Supported channel: Channel 1~13, 2412~2472 MHz	500
ENW49C01AZKF	PAN9420ETU	PAN9420 Easy-To-Use pin-header board with the module ENW49C01A3KF	1
ENW49C01AYKF	PAN9420-KIT	PAN9420 Evaluation Kit. It contains the following parts: • PAN9420 Mother Board • PAN9420ETU • USB Type-B cable	1
ENW49C01AXKF	PAN9420 Arduino Shield	Arduino Shield with the module ENW49C01A3KF for the Arduino Due Board	1

[1] Abbreviation for Minimum Order Quantity (MOQ). Samples for evaluation can be delivered at any quantity via the distribution channels.

7.2 Contact Details

7.2.1 Contact Us

Please contact your local Panasonic Sales office for details on additional product options and services:

For Panasonic Sales assistance in the **EU**, visit

https://eu.industrial.panasonic.com/about-us/contact-us

Email: wireless@eu.panasonic.com

For Panasonic Sales assistance in **North America**, visit the Panasonic “Sales & Support” website to find assistance near you at

https://na.industrial.panasonic.com/distributors

Please visit the **Panasonic Wireless Technical Forum** to submit a question at

https://forum.na.industrial.panasonic.com

7.2.2 Product Information

Please refer to the Panasonic Wireless Connectivity website for further information on our products and related documents:

For complete Panasonic product details in the **EU**, visit

http://pideu.panasonic.de/products/wireless-modules.html

For complete Panasonic product details in **North America**, visit

http://www.panasonic.com/rfmodules